CAD FILE:

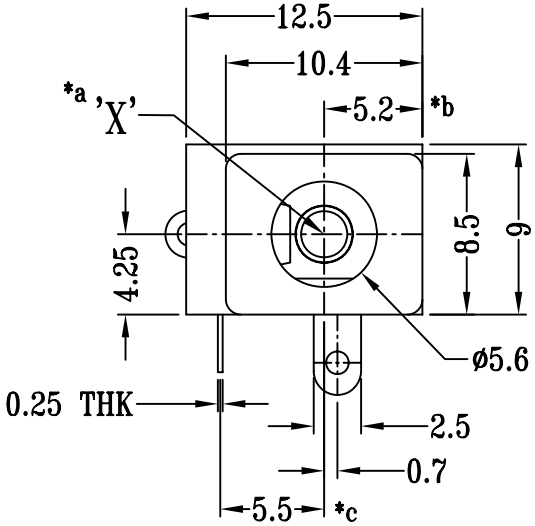

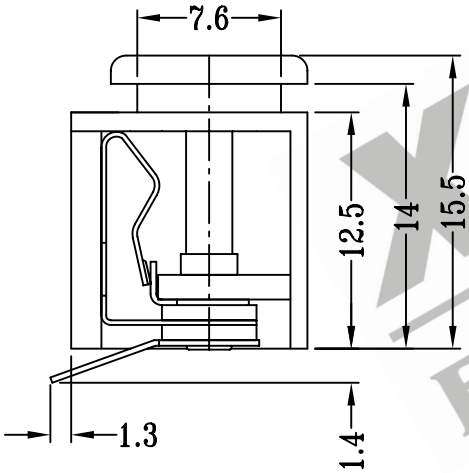

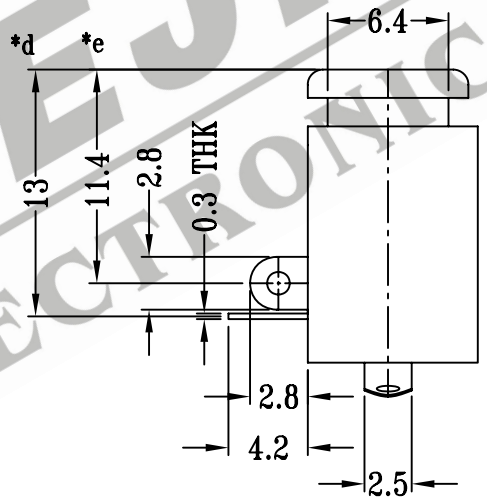

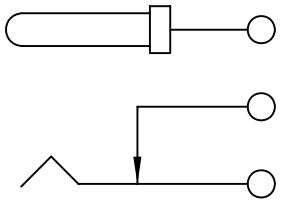

SCHEMATIC

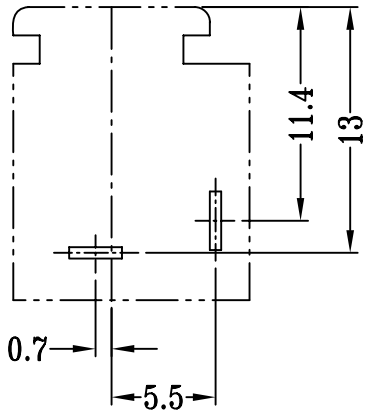

P.C.B LAYOUT

注："*"表示关键尺寸（6个）

DIA. OF PIN 'X' A = 2.5 MM	
DIA. OF PIN 'X' A = 2.0 MM	
DIA. OF PIN 'X' A = 2.35 MM	

NO.	PART NAME	MATERIAL	Q'TY	FINISHING
8				
7				
6	CONTACT	BRASS STRIP	1	Ag PLATED OVER Ni PLATED
5	TERMINAL	BRASS STRIP	1	Ag PLATED OVER Ni PLATED
4	WASHER	PHENOLIC RESIN	2	NATURAL
3	SPRING TERMINAL	PBS STRIP	1	Ag PLATED OVER Ni PLATED
2	PLUG PIN	BRASS STRIP	1	Ni PLATED
1	CASE	PC	1	BLACK

TOLERANCE UNLESS SPECIFIED
WITHIN: 1.5±0.1mm
OVER : 1.5±0.2mm

SHENZHEN XIEJIA ELECTRONICS CO.,LTD.

ISSUE	DATE	DESCRIPTIONS	APPD.

TITLE : DC POWER JACK
UNIT : MM
DRWG NO.: XJ-DR-DS309-00
MODEL: DS-309
SCALE: 5:2

DWN.	ZHOUYU	2003-5-12
CHK'D	FANGYING	2003-5-12
APPD.	KANGXINAN	2003-5-12

ALL MATERIALS MUST BE COMPLIANT TO ROHS

XIEJIA ELECTRONICS